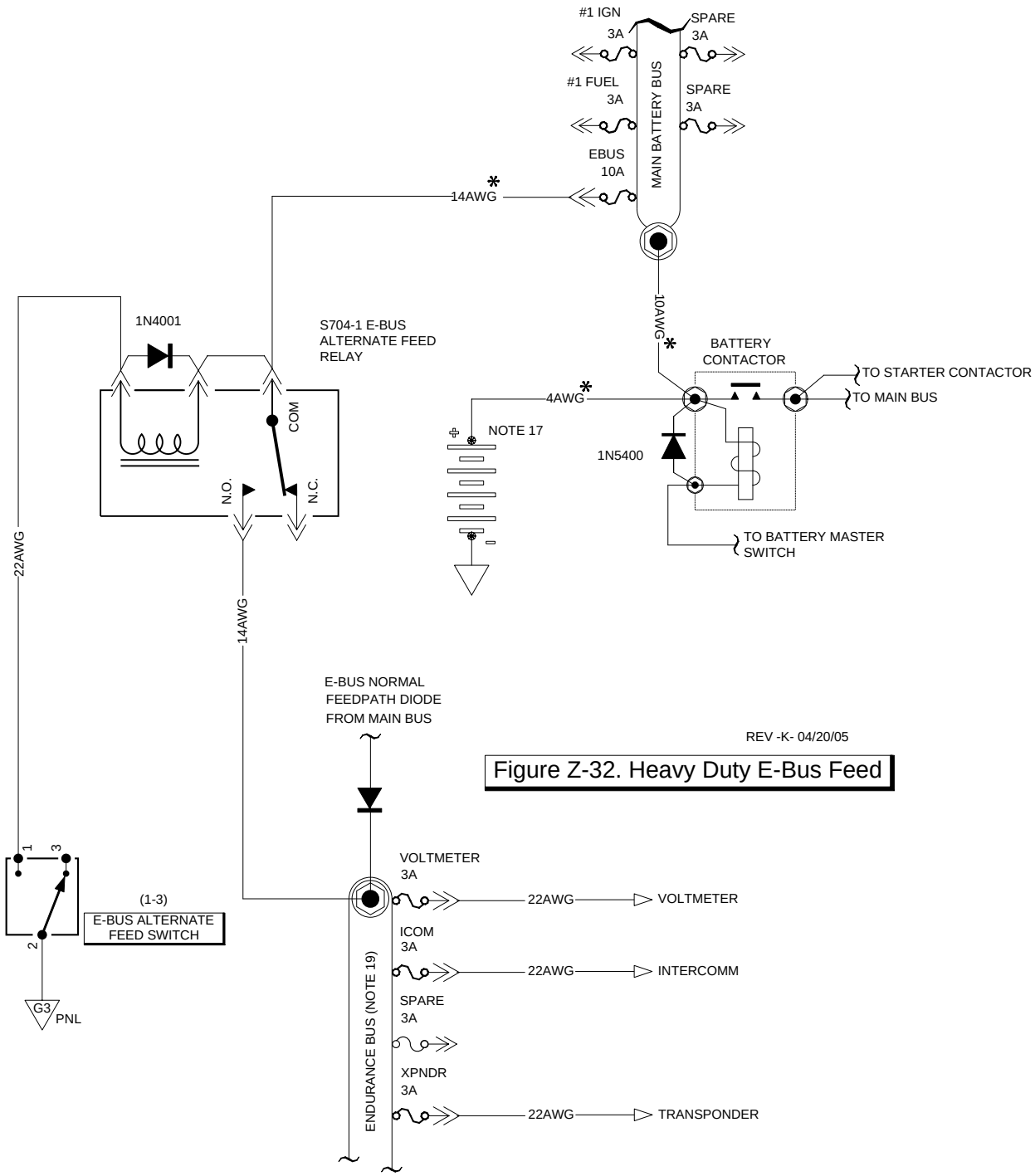

Figure Z-32. Heavy Duty E-Bus Feed

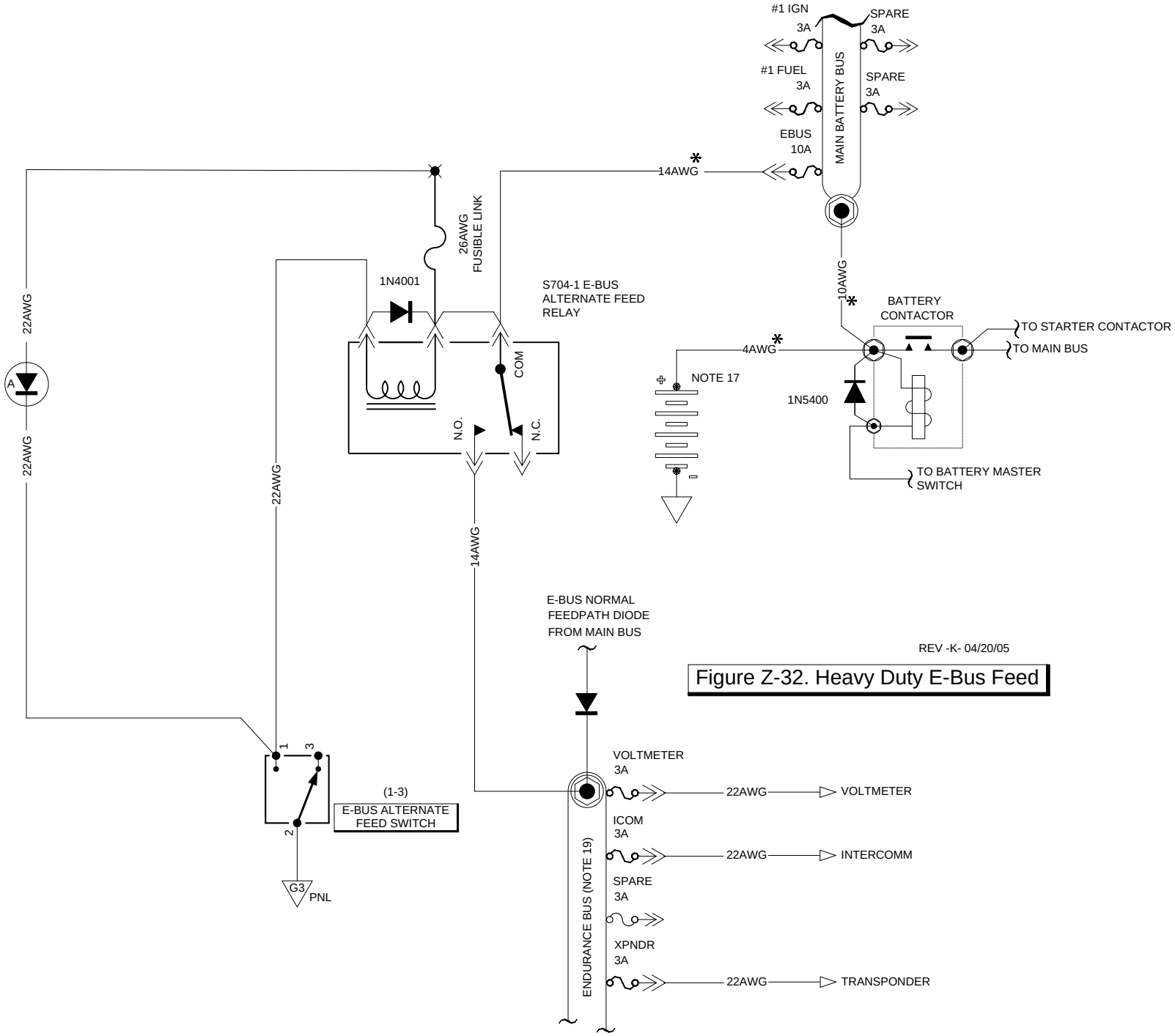
#1 IGN
3A
SPARE
3A
#1 FUEL
3A
SPARE
3A
EBUS
10A
MAIN BATTERY BUS
14AWG
*
26AWG
FUSIBLE LINK
1N4001
S704-1 E-BUS
ALTERNATE FEED
RELAY
COM
N.O.
N.C.
22AWG
A
22AWG
22AWG
14AWG
10AWG
*
BATTERY
CONTACTOR
TO STARTER CONTACTOR
TO MAIN BUS
4AWG
*
NOTE 17
1N5400
TO BATTERY MASTER
SWITCH
E-BUS NORMAL
FEEDPATH DIODE
FROM MAIN BUS
REV -K- 04/20/05
Figure Z-32. Heavy Duty E-Bus Feed
1
3
2
(1-3)
E-BUS ALTERNATE
FEED SWITCH
G3
PNL
VOLTMETER
3A
22AWG
VOLTMETER
ICOM
3A
22AWG
INTERCOMM
SPARE
3A
XPNDR
3A
22AWG
TRANSPONDER
ENDURANCE BUS (NOTE 19)

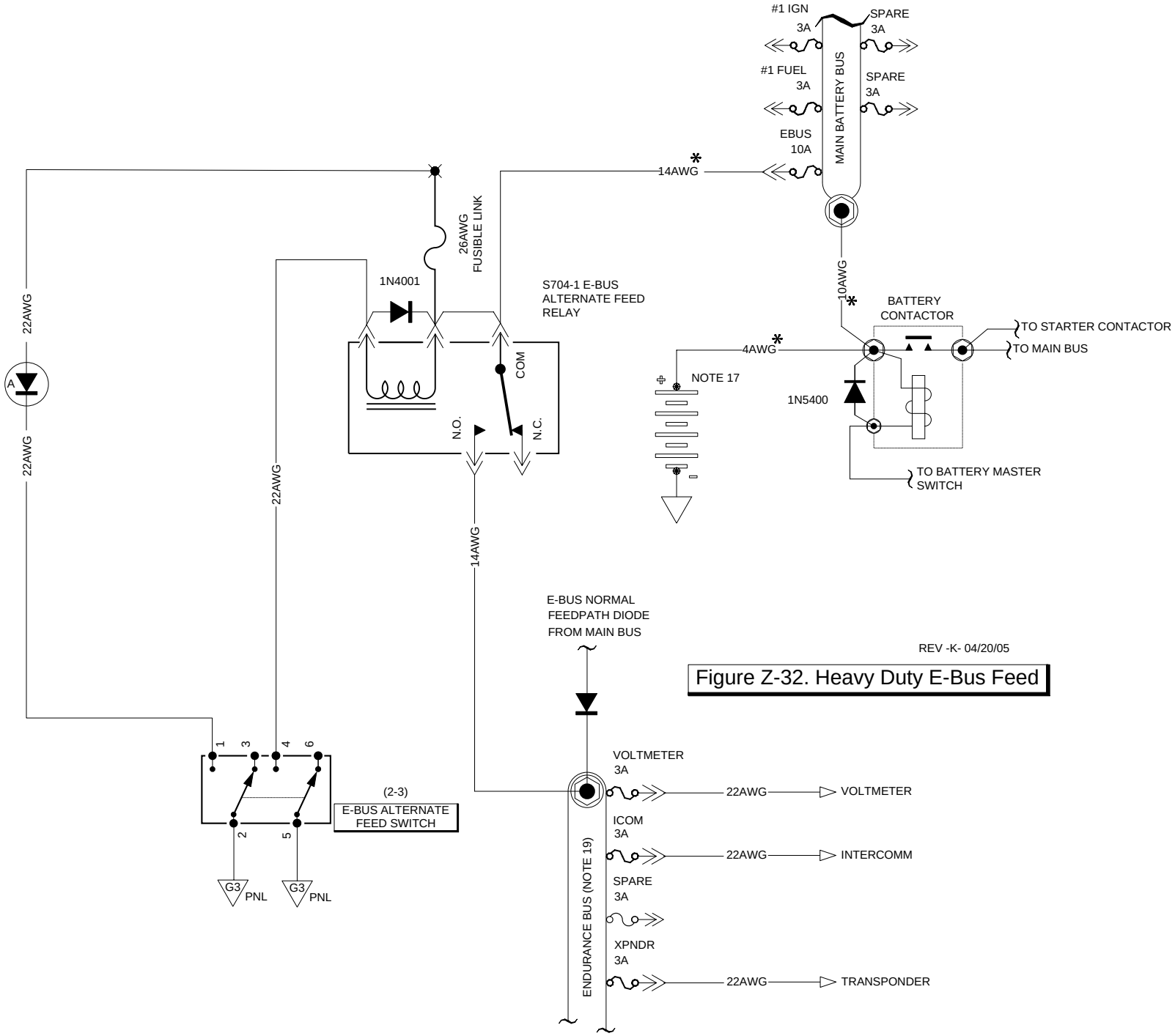
#1 IGN
3A
SPARE
3A
#1 FUEL
3A
SPARE
3A
EBUS
10A
MAIN BATTERY BUS
14AWG
*
26AWG
FUSIBLE LINK
1N4001
S704-1 E-BUS
ALTERNATE FEED
RELAY
COM
N.O.
N.C.
22AWG
A
22AWG
22AWG
14AWG
10AWG
*
BATTERY
CONTACTOR
TO STARTER CONTACTOR
TO MAIN BUS
4AWG
*
NOTE 17
1N5400
TO BATTERY MASTER
SWITCH
E-BUS NORMAL
FEEDPATH DIODE
FROM MAIN BUS
REV -K- 04/20/05
Figure Z-32. Heavy Duty E-Bus Feed
1
3
4
6
2
5
G3
PNL
G3
PNL
(2-3)
E-BUS ALTERNATE
FEED SWITCH
VOLTMETER
3A
22AWG
VOLTMETER
ICOM
3A
22AWG
INTERCOMM
SPARE
3A
XPNDR
3A
22AWG
TRANSPONDER
ENDURANCE BUS (NOTE 19)

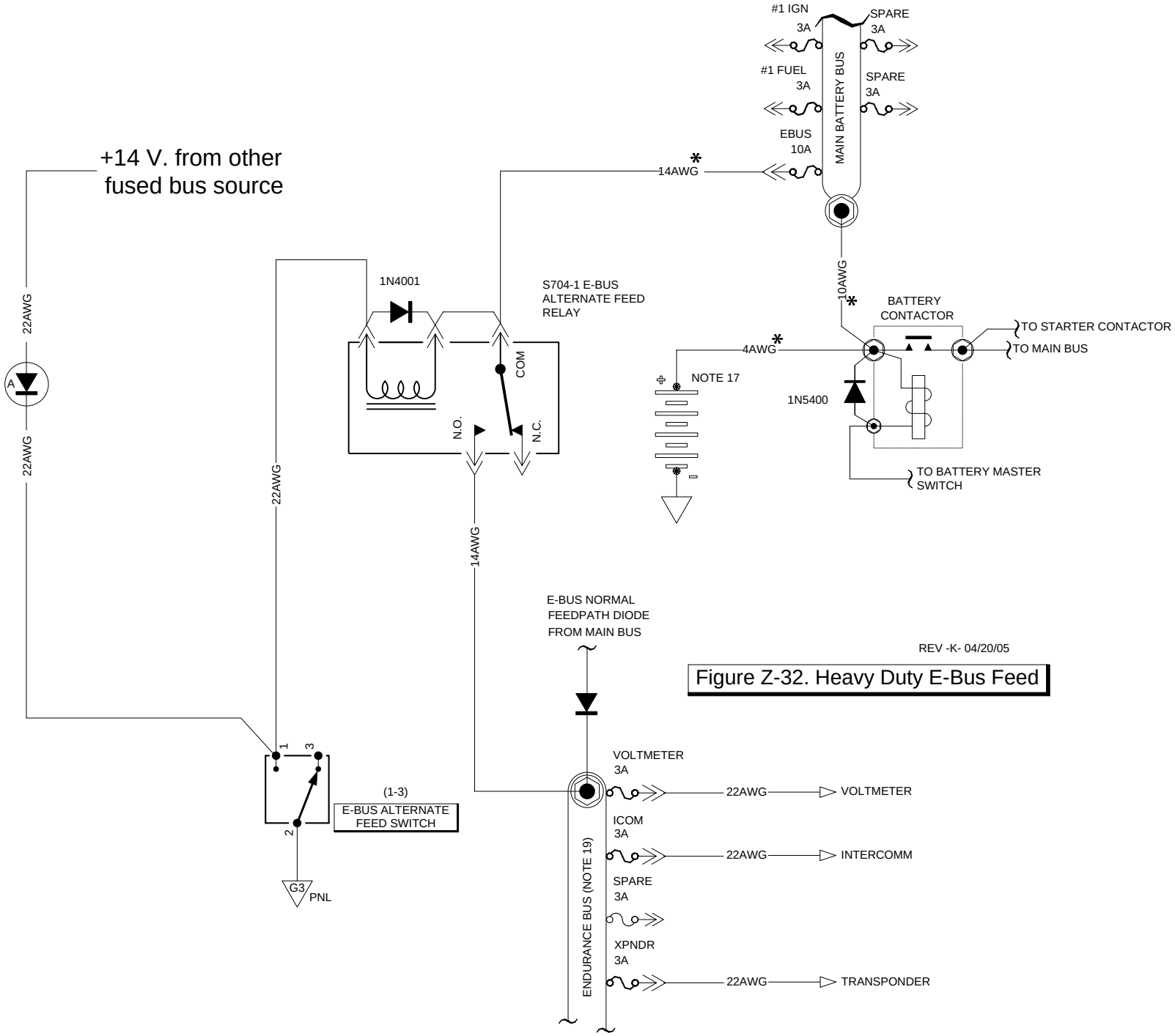
+14 V. from other
fused bus source
22AWG
A
22AWG
22AWG
1N4001
S704-1 E-BUS
ALTERNATE FEED
RELAY
COM
N.O.
N.C.
14AWG
#1 IGN
3A
SPARE
3A
#1 FUEL
3A
SPARE
3A
EBUS
10A
MAIN BATTERY BUS
14AWG
10AWG
BATTERY
CONTACTOR
TO STARTER CONTACTOR
TO MAIN BUS
4AWG
NOTE 17
1N5400
TO BATTERY MASTER
SWITCH
E-BUS NORMAL
FEEDPATH DIODE
FROM MAIN BUS
REV -K- 04/20/05
Figure Z-32. Heavy Duty E-Bus Feed
1
3
2
(1-3)
E-BUS ALTERNATE
FEED SWITCH
G3
PNL
VOLTMETER
3A
22AWG
VOLTMETER
ICOM
3A
22AWG
INTERCOMM
SPARE
3A
XPNDR
3A
22AWG
TRANSPONDER
ENDURANCE BUS (NOTE 19)

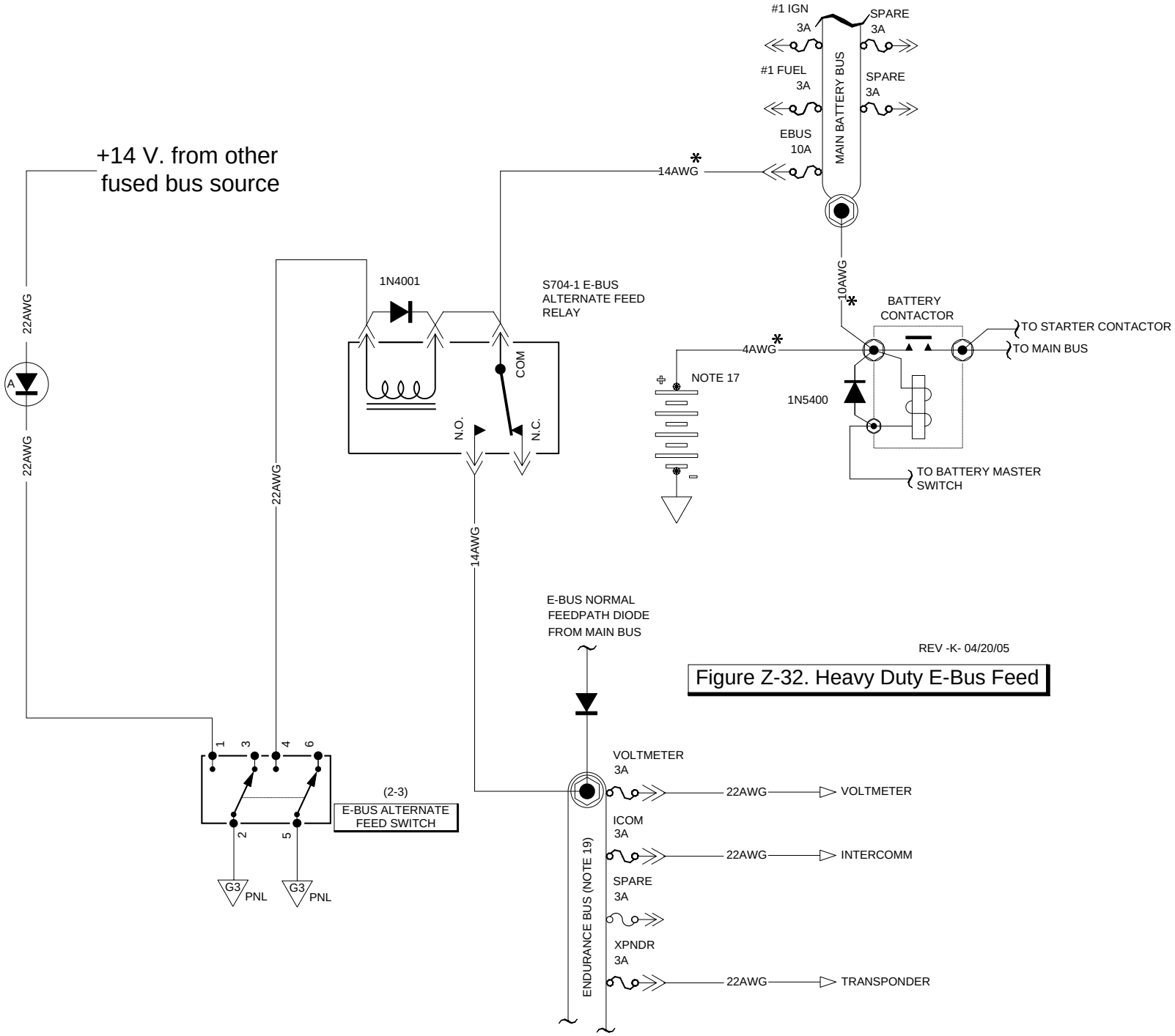

Figure Z-32. Heavy Duty E-Bus Feed